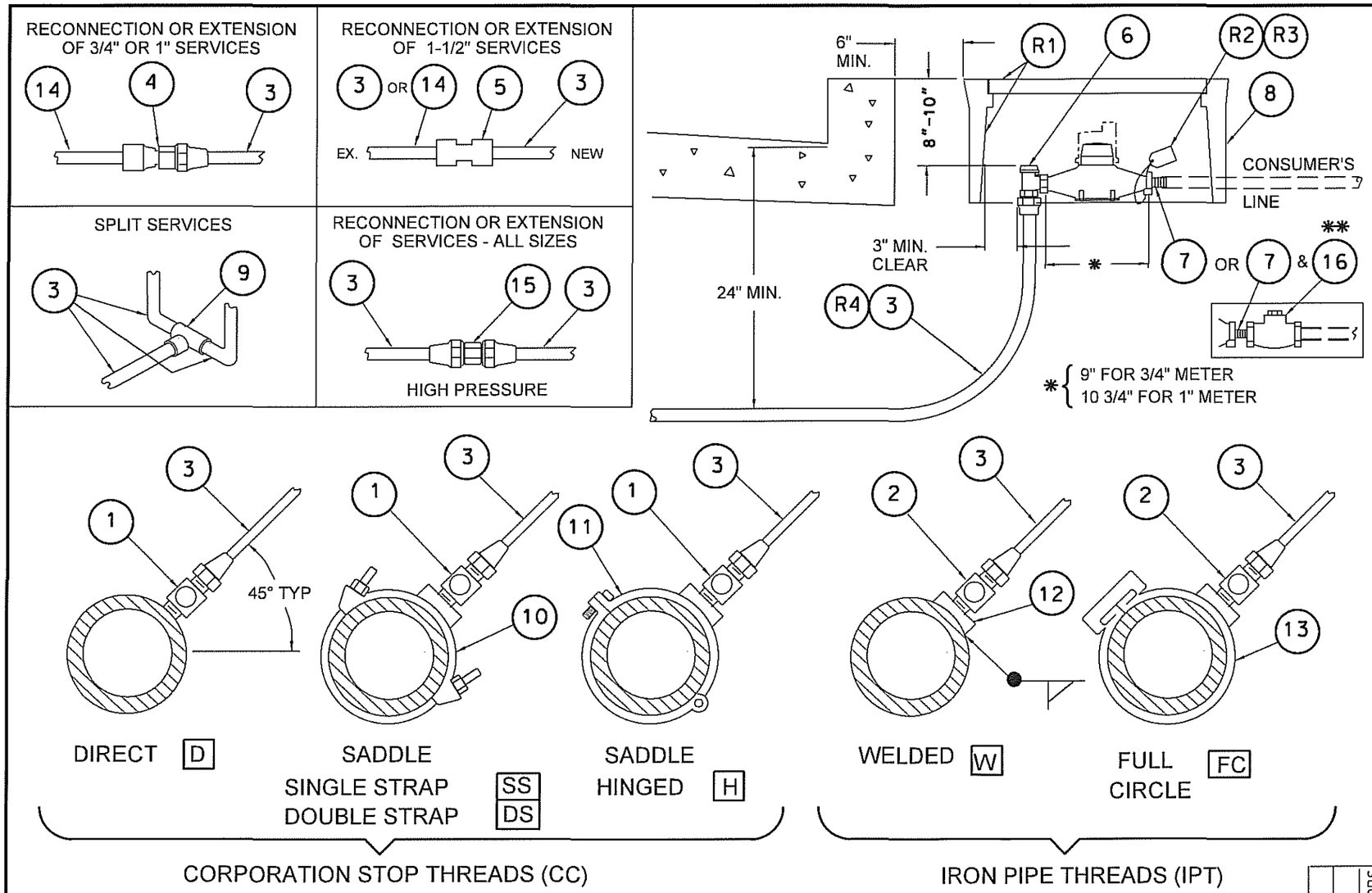

MATERIAL LIST

#	DESCRIPTION
1	3/4", 1" OR 1-1/2" CORP STOP, CC X FLR
2	3/4", 1" OR 1-1/2" CORP STOP, MIPT X FLR
3	3/4", 1" OR 1-1/2" PIPE, COPPER TYPE K
4	3/4" OR 1" COUPLING, FLR X COM
5	3/4" OR 1" COUPLING, STREAMLINE FLR X FLR OR FLR X COM
6	3/4" OR 1" ANGLE METER STOP, FLR X MSN
7	3/4" OR 1" COUPLING, METER MIPT X MSN
8	METER BOX ***
9	3/4" X 3/4" X 1" OR 1" X 1" X 1-1/2" TEE, STREAMLINE
10	SADDLE, SERVICE SSCC OR DSCC
11	SADDLE, SERVICE, HINGED
12	COUPLING, WELD FIPT
13	CLAMP, FULL CIRCLE W/ TAP FIPT
14	3/4", 1" OR 1-1/2" PIPE PLASTIC PE CTS
15	3/4", 1" OR 1-1/2" COUPLING, FLR X FLR
** FOR SERVICES w/ FIRE SPRINKLERS	
16	3/4" OR 1" SWING CHECK VALVE W/ BUNA SEAT (FIPT X FIPT)

ADDITIONAL FOR RECYCLED WATER (RW) SERVICES:

R1	PAINT THE LID & INSIDE THE METER BOX PURPLE
R2	PLACE "RW" ADVISORY TAG ON RW METER
R3	PLACE "RW" ADVISORY TAG ON ALL RW METERS SERVING SITES RECEIVING RW
R4	INSTALL "RW" ADVISORY WARNING TAPE ABOVE RW LATERAL IF SERVICE LATERAL INSTALLED BY OPEN TRENCH

MSN = METER SWIVEL NUT & COM = COMPRESSION

*** SEE MATERIAL SPECIFICATIONS LIST FOR SIZING OF METER BOXES.

SERVICE CONNECTION CHART

MAIN TYPE	CI/DICL						STEEL CEMENT LINED						SOMCL	*OD	AC						PVC
MAIN SIZE	4"	6"	8"	10"	12"	UP	4"	6"	8"	10"	12"	UP	ALL	ALL	4"	6"	8"	10"	12"	UP	ALL
3/4"	D	D	D	D	D	D	SS	SS	SS	SS	W	W	W	SS	SS	DS	DS	DS	DS	DS	H
1"	D	D	D	D	D	D	SS	SS	SS	SS	W	W	W	SS	SS	SS	DS	DS	DS	DS	H
1-1/2"	DS	DS	DS	D	D	D	DS	DS	DS	DS	W	W	W	DS	FC	DS	DS	DS	DS	DS	H

SERVICE PIPE SHALL BE BEDDED AND SHADED (4" MIN.) IN SAND

SEE SPECS FOR COATED COPPER PIPE

* STEEL PIPE NOT LINED: WS, SI, GG

BY	DATE	CK	AP	OPS

REVISION

SAN JOSE WATER COMPANY

STANDARD SERVICE INSTALLATION 3/4", 1", 1" X 3/4" & 1-1/2" X 1" COPPER SERVICES

BY P. JOCHIM

DATE 7/31/2013

CK

SCALE NONE

OPERATIONS 8/6/13

ENGINEERING 8/7/13

VICE PRESIDENT OF ENGINEERING 8/6/13

REF. NOS.

DWG. NO. SER-1c

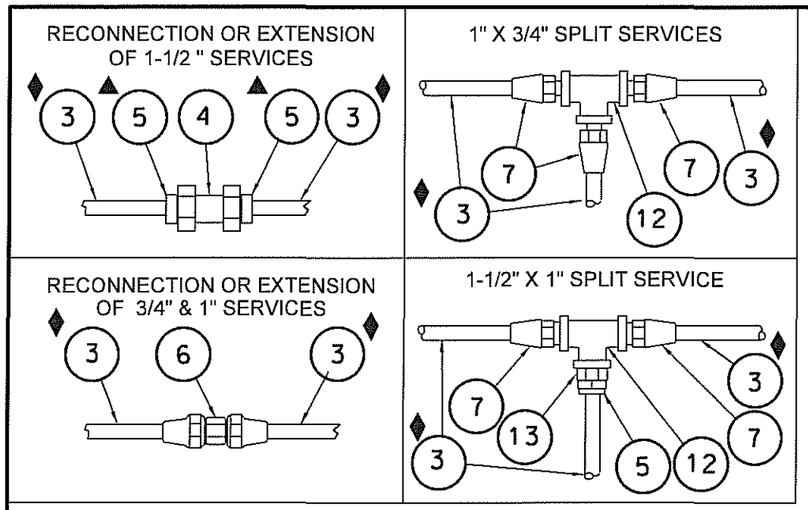

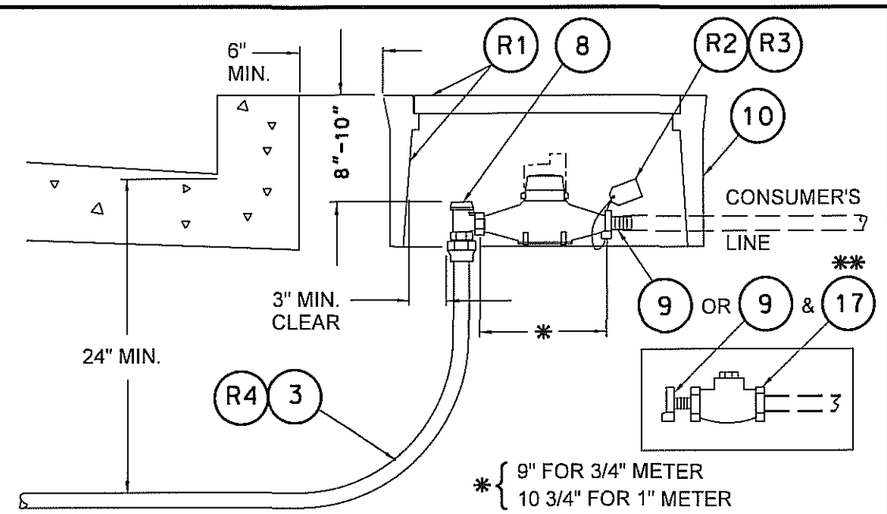

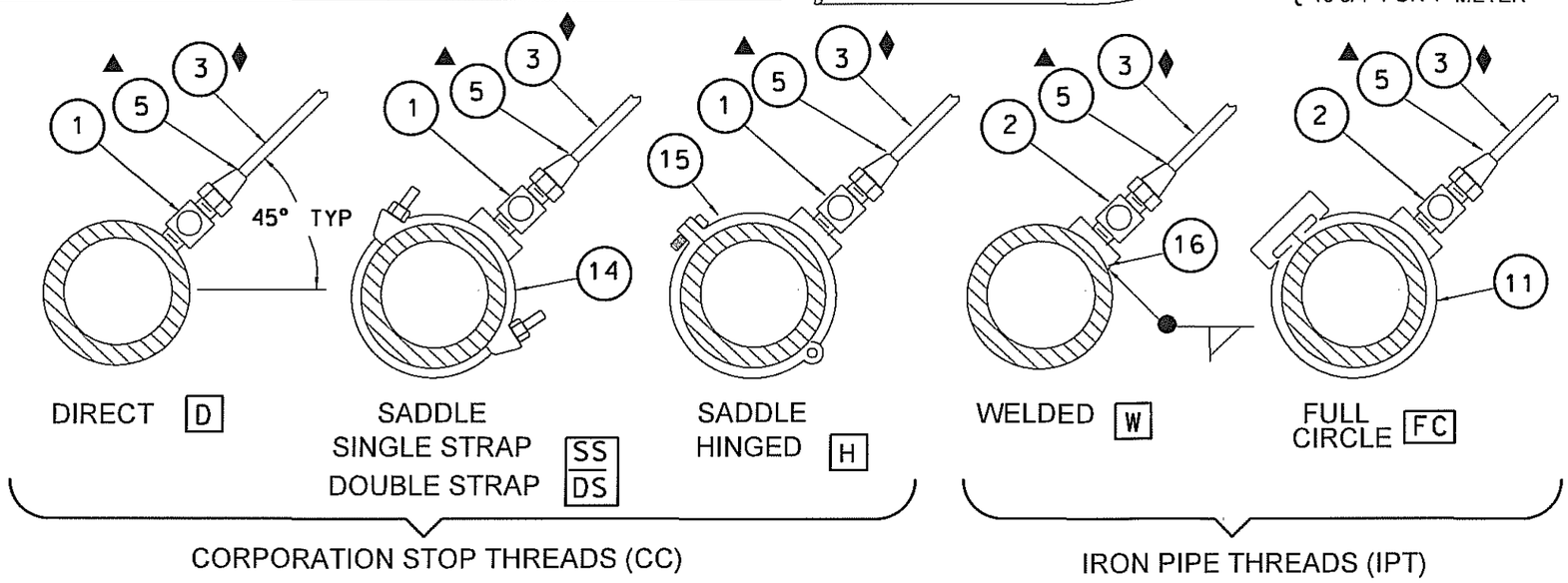

MATERIAL LIST

#	DESCRIPTION
1	3/4", 1" OR 1-1/2" CORP STOP, CC X COM
2	3/4", 1" OR 1-1/2" CORP STOP, MIPT X COM
3	3/4", 1" OR 1-1/2" PIPE, PLASTIC PE CTS ♦
4	1-1/2" CPLG, COM
5	3/4", 1" OR 1-1/2" INSERT ▲ (COMPRESSION FITTINGS)
6	COUPLING, COM OR IT
7	COUPLING, MIPT X COM
8	3/4" OR 1" ANGLE METER STOP, MSN X COM
9	3/4" OR 1" COUPLING, METER, MIPT X MSN
10	METER BOX ***
11	CLAMP, FULL CIRCLE W/ TAP FIPT
12	3/4" X 3/4" X 1" OR 1" X 1" X 1-1/2" TEE, BULKHEAD, STD. BRASS
13	1" CPLG, MIPT X COM
14	SADDLE, SERVICE SSCC OR DSCC
15	SADDLE, SERVICE, HINGED
16	COUPLING, WELD FIPT
**	FOR SERVICES w/ FIRE SPRINKLERS
17	3/4" OR 1" SWING CHECK VALVE W/ BUNA SEAT (FIPT X FIPT)

ADDITIONAL FOR RECYCLED WATER (RW) SERVICES:

R1	PAINT THE LID & INSIDE THE METER BOX PURPLE
R2	PLACE "RW" ADVISORY TAG ON RW METER
R3	PLACE "RW" ADVISORY TAG ON ALL RW METERS SERVING SITES RECEIVING RW
R4	INSTALL "RW" ADVISORY WARNING TAPE ABOVE RW LATERAL IF SERVICE LATERAL INSTALLED BY OPEN TRENCH

MSN = METER SWIVEL NUT & COM = COMPRESSION

*** SEE MATERIAL SPECIFICATIONS LIST FOR SIZING OF METER BOXES.

SERVICE CONNECTION CHART

MAIN TYPE	CI/DICL						STEEL CEMENT LINED						SOMCL	*OD	AC						PVC
MAIN SIZE	4"	6"	8"	10"	12"	UP	4"	6"	8"	10"	12"	UP	ALL	ALL	4"	6"	8"	10"	12"	UP	ALL
3/4"	D	D	D	D	D	D	SS	SS	SS	SS	W	W	W	SS	SS	DS	DS	DS	DS	DS	H
1"	D	D	D	D	D	D	SS	SS	SS	SS	W	W	W	SS	SS	SS	DS	DS	DS	DS	H
1 1/2"	DS	DS	DS	D	D	D	DS	DS	DS	DS	W	W	W	DS	FC	DS	DS	DS	DS	DS	H

♦ ALL SERVICES MUST HAVE TRACER WIRE INSTALLED PER SPECIFICATIONS

SERVICE PIPE SHALL BE BEDDED AND SHADED (4" MIN.) IN SAND

* STEEL PIPE NOT LINED: WS, SI, GG

BY	DATE	CK	REVISION	OPS	AP	CK	DATE

SAN JOSE WATER COMPANY

STANDARD SERVICE INSTALLATION
3/4", 1", 1" X 3/4" & 1-1/2" x 1"
PLASTIC SERVICES

BY P. JOCHIM
DATE 7/31/2013
CK
SCALE SHOWN

OPERATIONS 8/6/13
ENGINEERING 8/1/13
VICE PRESIDENT OF ENGINEERING 8/6/13

REF. NOS.

DWG. NO. SER-1p

Effective 09/03/2013

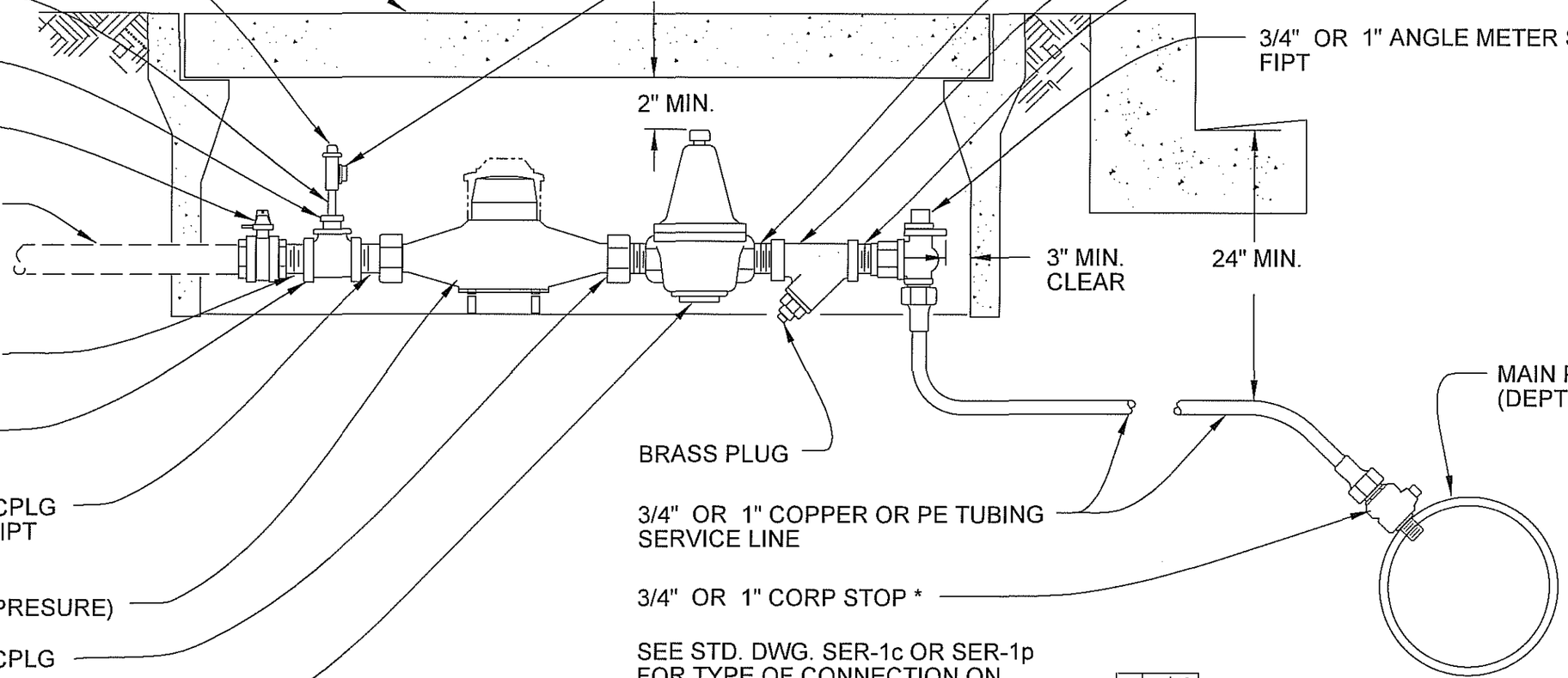

NOTES:

SERVICE PIPE SHALL BE BEDDED AND SHADED (4" MIN.) IN SAND.

SET OUTLET PRESSURE TO 90 P.S.I. UNLESS OTHERWISE NOTED.

* RATED FOR 300 P.S.I. WORKING PRESSURE.

BY	DATE	CK	AP	OPS

REVISION

SAN JOSE WATER COMPANY

3/4" OR 1" SERVICE w/
PRESSURE REGULATOR

BY P. JOCHIM
DATE 6/3/2013
CK EFELICG 6/5/13
SCALE NONE

OPERATIONS 6/14/13
ENGINEERING 07/5/13
VICE PRESIDENT OF ENGINEERING 7/19/13

REF. NOS.

DWG. NO.
SER-1r

Effective 09/03/2013

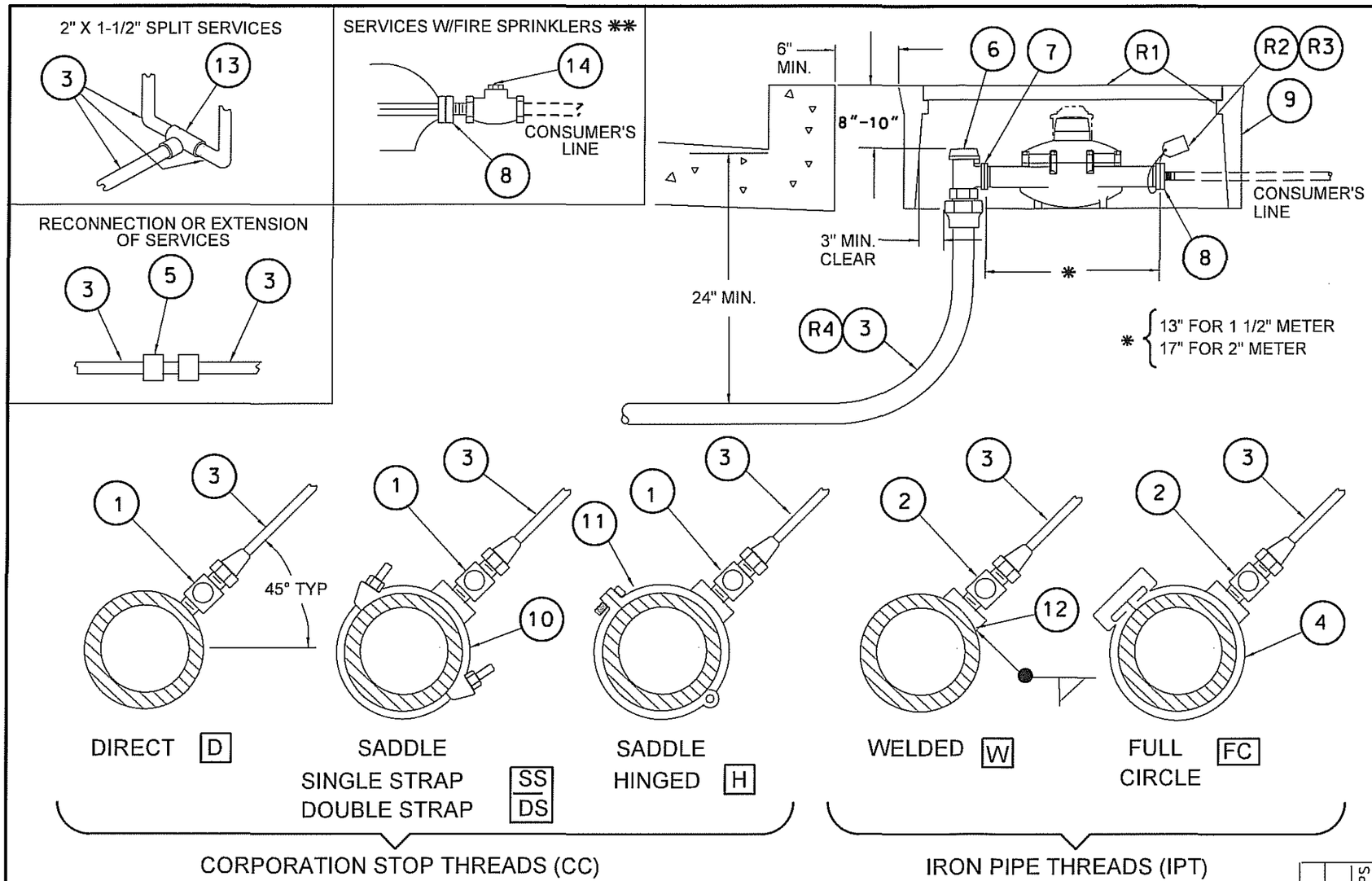

MATERIAL LIST

#	DESCRIPTION
1	1-1/2" OR 2" CORP STOP: CC X FLR
2	1-1/2" OR 2" CORP STOP: MIPT X FLR
3	1-1/2" OR 2" PIPE, COPPER TYPE K
4	CLAMP, FULL CIRCLE W/ TAP FIPT
5	1-1/2" OR 2" COUPLING, STREAMLINE FLR X FLR OR FLR X COM
6	1-1/2" OR 2" ANGLE METER STOP METER FLANGE X FLR
7	1-1/2" OR 2" INSULATING KIT
8	1-1/2" OR 2" METER FLANGE X MIPT
9	METER BOX ***
10	SADDLE, SERVICE SSCC OR DSCC
11	SADDLE, SERVICE HINGED
12	COUPLING, WELD FIPT
13	1-1/2" X 1-1/2" X 2" TEE, STREAMLINE, FLR X FLR X FLR
**	FOR SERVICES w/ FIRE SPRINKLERS
14	1-1/2" OR 2" SWING CHECK VALVE W/ BUNA SEAT FIPT X FIPT
	ADDITIONAL FOR RECYCLED WATER (RW) SERVICES:
R1	PAINT THE LID & INSIDE THE METER BOX PURPLE
R2	PLACE "RW" ADVISORY TAG ON RW METER
R3	PLACE "RW" ADVISORY TAG ON ALL RW METERS SERVING SITES RECEIVING RW
R4	INSTALL "RW" ADVISORY WARNING TAPE ABOVE RW LATERAL IF SERVICE LATERAL INSTALLED BY OPEN TRENCH

COM = COMPRESSION

*** SEE MATERIAL SPECIFICATIONS LIST FOR SIZING OF METER BOXES.

SERVICE CONNECTION CHART

MAIN TYPE	CI/DICL						STEEL CEMENT LINED						SOMCL	*OD	AC						PVC
MAIN SIZE	4"	6"	8"	10"	12"	UP	4"	6"	8"	10"	12"	UP	ALL	ALL	4"	6"	8"	10"	12"	UP	ALL
1-1/2"	DS	DS	DS	D	D	D	DS	DS	DS	DS	W	W	W	DS	FC	DS	DS	DS	DS	DS	H
2"	DS	DS	DS	D	D	D	DS	DS	DS	DS	W	W	W	DS	FC	FC	DS	DS	DS	DS	H

SERVICE PIPE SHALL BE BEDDED AND SHADED IN SAND

* STEEL PIPE NOT LINED: WS, SI, GG

BY	DATE	CK	AP	OPS

REVISION

SAN JOSE WATER COMPANY

STANDARD SERVICE INSTALLATION 1-1/2" & 2" COPPER SERVICES

BY P. JOCHIM

DATE 7/24/2013

CK 7/31/13

SCALE NONE

OPERATIONS 8/6/13

ENGINEERING 8/1/13

VICE PRESIDENT OF ENGINEERING 8/6/13

REF. NOS.

DWG. NO. SER-2c

Effective 09/03/2013

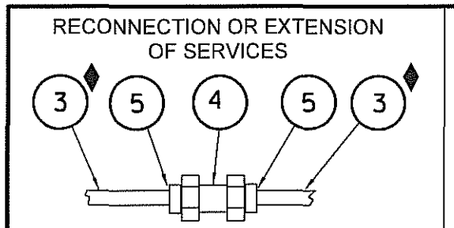

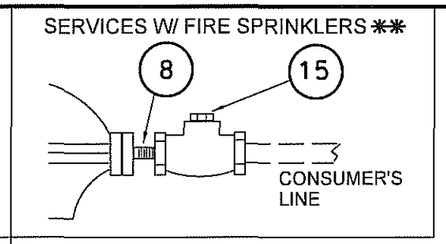

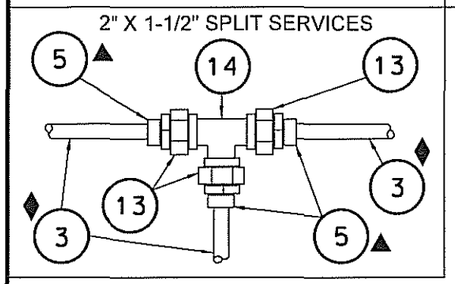

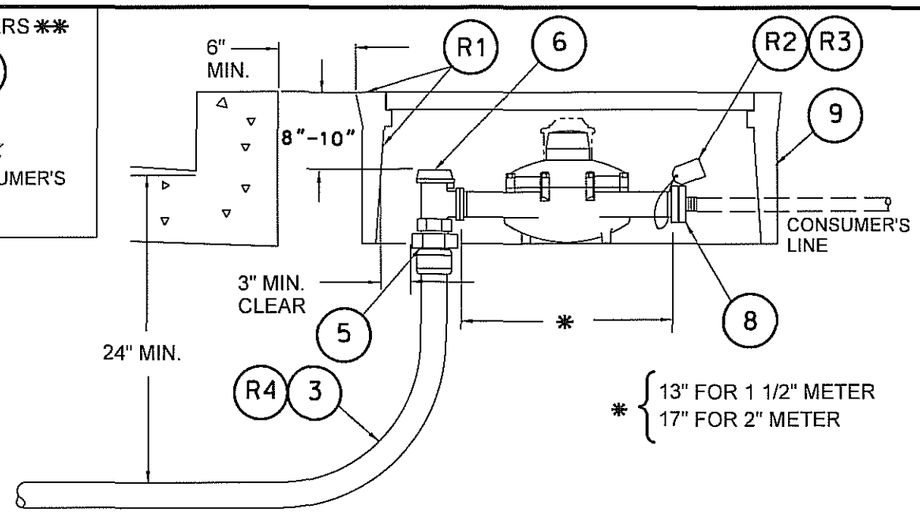

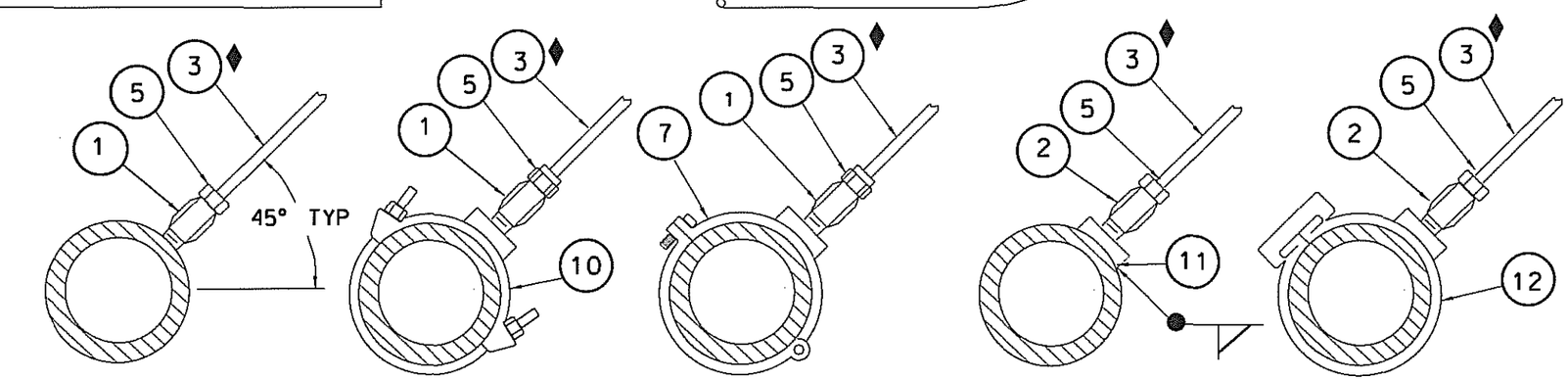

DIRECT [D]

SADDLE SINGLE STRAP / DOUBLE STRAP [SS / DS]

SADDLE HINGED [H]

WELDED [W]

FULL CIRCLE [FC]

CORPORATION STOP THREADS (CC)

IRON PIPE THREADS (IPT)

MATERIAL LIST

#	DESCRIPTION
1	1-1/2" OR 2" CORP STOP: CC X COM
2	1-1/2" OR 2" CORP STOP: MIPT X COM
3	1-1/2" OR 2" PIPE, PLASTIC PE CTS ♦
4	1-1/2" OR 2" COUPLING, COM
5	1-1/2" OR 2" INSERT ▲ (FOR COMPRESSION FITTING)
6	1-1/2" OR 2" ANGLE METER STOP METER FLANGE X COM
7	SADDLE, SERVICE , HINGED
8	1-1/2" OR 2" METER FLANGE X MIPT
9	METER BOX ✱✱✱
10	SADDLE, SERVICE SSCC OR DSCC
11	COUPLING, WELD FIPT
12	CLAMP, FULL CIRCLE W/ TAP FIPT
13	COUPLING, MIPT X PE CTS, COM
14	1-1/2" X 1-1/2" X 2" TEE, BULKHEAD STD. BRASS
✱✱	FOR SERVICES w/ FIRE SPRINKLERS
15	1-1/2" OR 2" SWING CHECK VALVE w/ BUNA SEAT FIPT X FIPT
	ADDITIONAL FOR RECYCLED WATER (RW) SERVICES:
R1	PAINT THE LID & INSIDE THE METER BOX PURPLE
R2	PLACE "RW" ADVISORY TAG ON RW METER
R3	PLACE "RW" ADVISORY TAG ON ALL RW METERS SERVING SITES RECEIVING RW
R4	INSTALL "RW" ADVISORY WARNING TAPE ABOVE RW LATERAL IF SERVICE LATERAL INSTALLED BY OPEN TRENCH

COM = COMPRESSION

CTS = COPPER TUBE SIZE

✱✱✱ SEE MATERIAL SPECIFICATIONS LIST FOR SIZING OF METER BOXES.

SERVICE CONNECTION CHART

MAIN TYPE	CI/DICL						STEEL CEMENT LINED						SOMCL	*OD	AC						PVC
MAIN SIZE	4"	6"	8"	10"	12"	UP	4"	6"	8"	10"	12"	UP	ALL	ALL	4"	6"	8"	10"	12"	UP	ALL
1 1/2"	DS	DS	DS	D	D	D	DS	DS	DS	DS	W	W	W	DS	FC	DS	DS	DS	DS	DS	H
2"	DS	DS	DS	D	D	D	DS	DS	DS	DS	W	W	W	DS	FC	FC	DS	DS	DS	DS	H

♦ ALL SERVICES MUST HAVE METALLIC MARKER TAPE

SERVICE PIPE SHALL BE BEDDED AND SHADED (4" MIN) IN SAND

* STEEL PIPE NOT LINED: WS, SI, GG

BY	REVISION	DATE	CK	AP	OPS

SAN JOSE WATER COMPANY

STANDARD SERVICE INSTALLATION
1-1/2" & 2"
PLASTIC SERVICES

BY P. JOCHIM — OPERATIONS 8/6/13

DATE 7/24/2013 — ENGINEERING 8/7/13

CK 7/31/13 — VICE PRESIDENT OF ENGINEERING 8/6/13

SCALE NONE

REF. NOS.

DWG. NO. SER-2p

Effective 09/03/2013

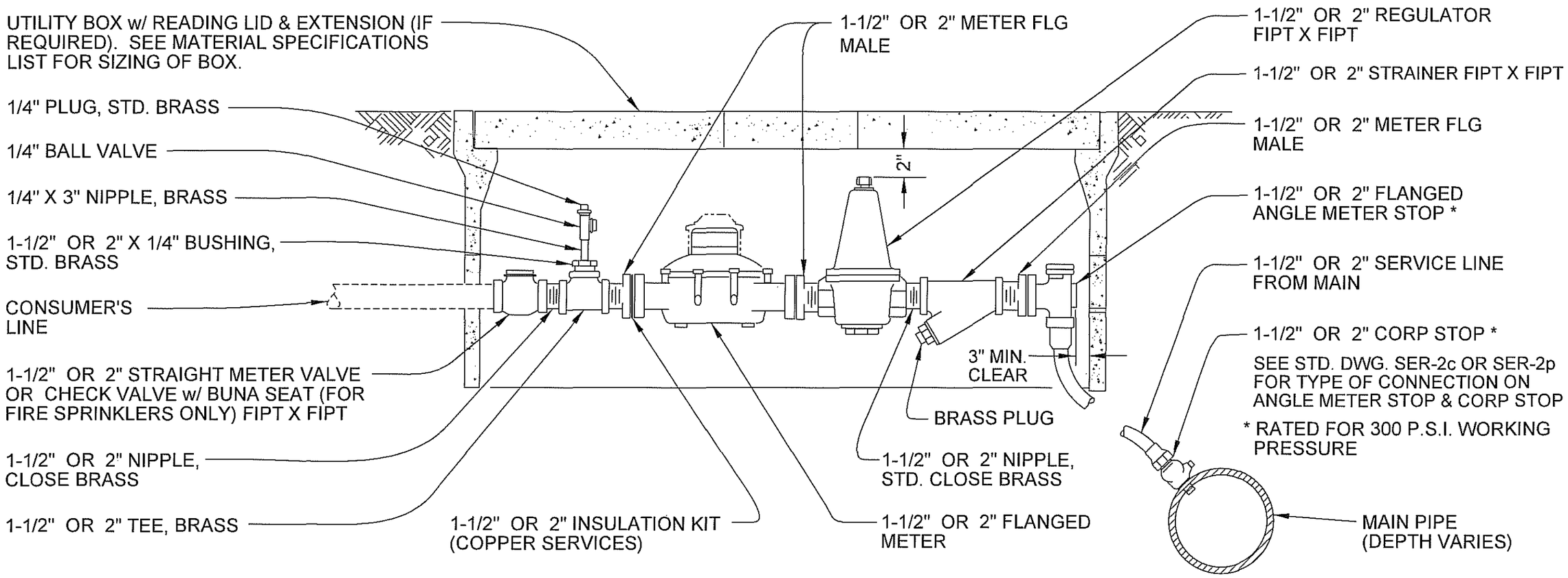

SINGLE BOX CONFIGURATION

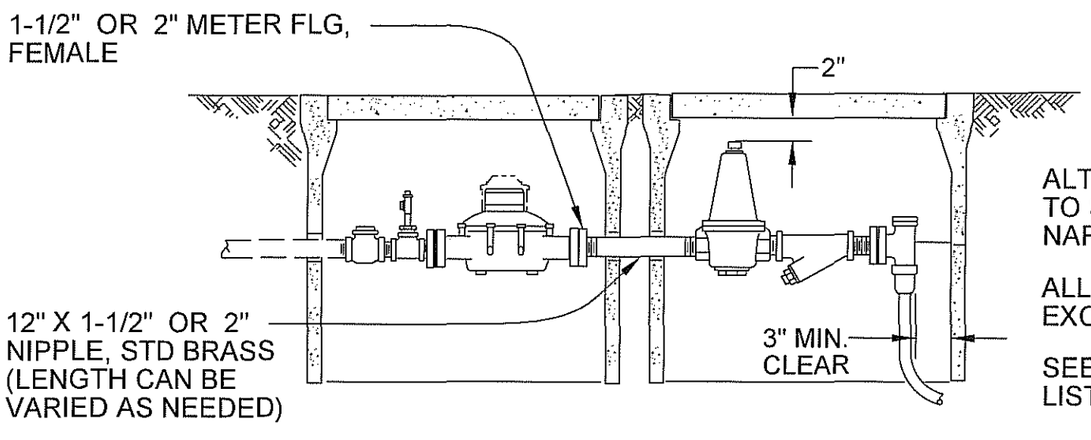

ALTERNATE CONFIGURATION TO SINGLE BOX LAYOUT FOR NARROW INSTALLATION AREAS.

ALL FITTINGS SAME AS ABOVE EXCEPT AS SHOWN.

SEE MATERIAL SPECIFICATIONS LIST FOR SIZING OF BOXES.

TANDEM BOX CONFIGURATION

NOTES:

SET OUTLET PRESSURE TO 90 P.S.I. UNLESS OTHERWISE SPECIFIED.

BY	CK	SAN JOSE WATER COMPANY	
	DATE	1-1/2" OR 2" SERVICE w/ PRESSURE REGULATOR	
REVISION	BY: P. JOCHIM	OPERATIONS 6/14/13	REF. NOS.
	DATE: 6/3/2013	ENGINEERING 6/5/13	DWG. NO. SER-2r
	CK: 6/5/13	VICE PRESIDENT OF ENGINEERING 7/19/13	
	SCALE: NONE		

Effective 09/03/2013

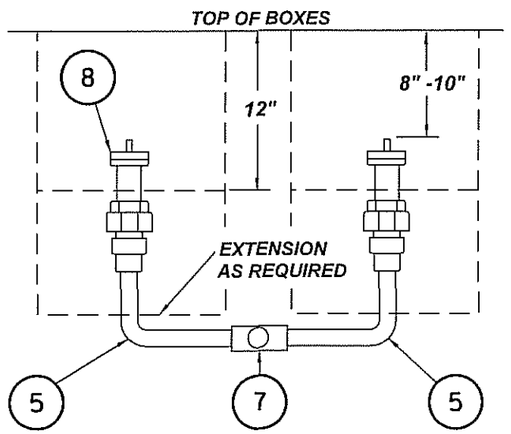

SECTION A-A

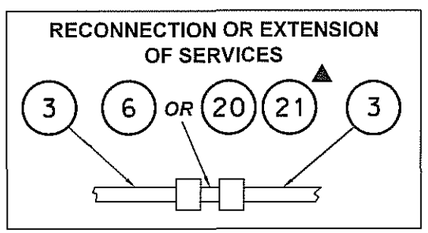

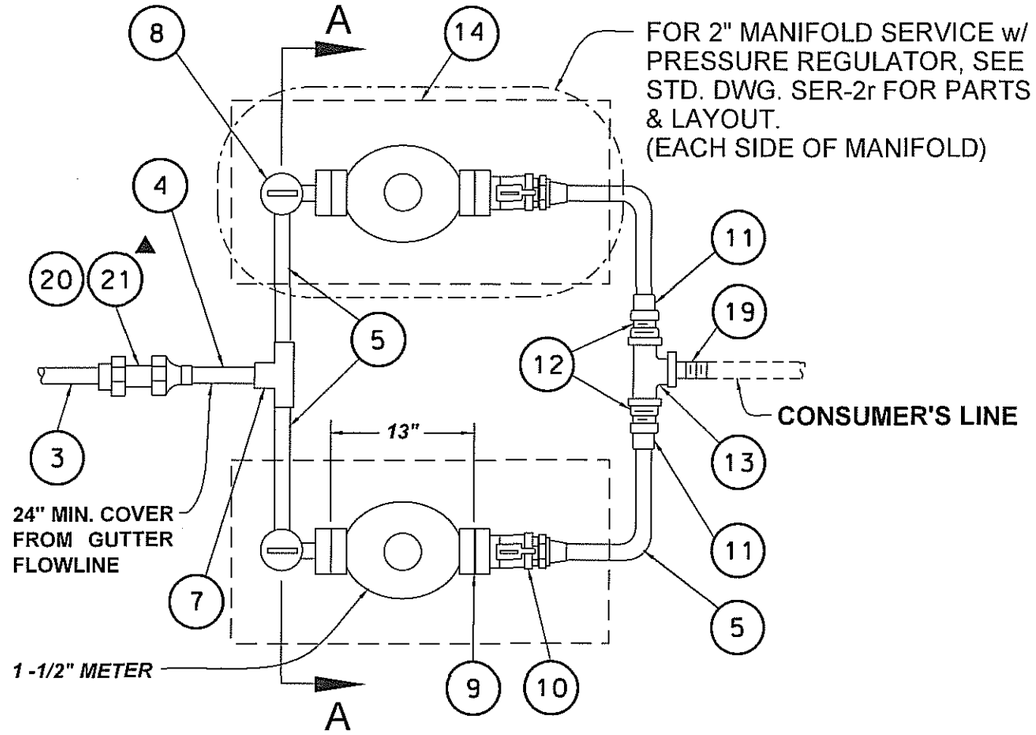

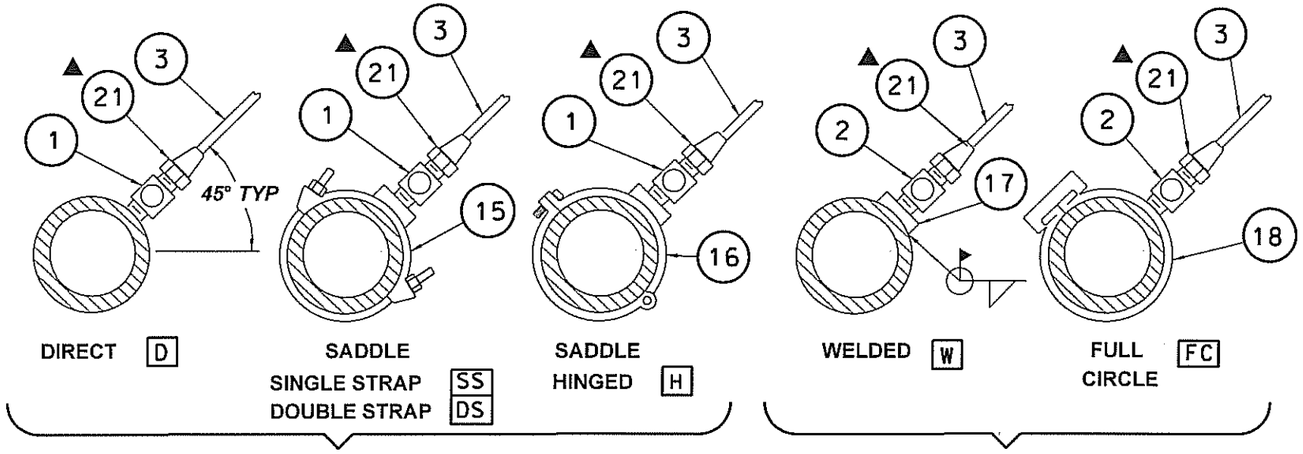

SERVICE CONNECTION CHART

TYPE	CI/DICL						STEEL CEMENT LINED						SOMCL	*OD	AC						PVC
SIZE	4"	6"	8"	10"	12"	UP	4"	6"	8"	10"	12"	UP	ALL	ALL	4"	6"	8"	10"	12"	UP	ALL
2"	DS	DS	DS	D	D	D	DS	DS	DS	DS	W	D	W	DS	FC	FC	DS	DS	DS	DS	H

* STEEL PIPE NOT LINED: WS, SI & GG

MATERIAL LIST

#	DESCRIPTION
1	2" CORP STOP: CC X FLR (COPPER SERVICE) OR CC X COM (PLASTIC SERVICE)
2	2" CORP STOP: MIPT X FLR (COPPER SERVICE) OR MIPT X COM (PLASTIC SERVICE)
3	2" PIPE, COPPER TYPE K OR PLASTIC PE CTS ♦
4	2" PIPE, COPPER TYPE K
5	1-1/2" PIPE, COPPER TYPE K
6	2" COUPLING, STREAMLINE, FLR X FLR
7	1-1/2" X 1-1/2" X 2" TEE, STREAMLINE FLR X FLR X FLR
8	1-1/2" ANGLE METER STOP, METER FLANGE X FLR
9	1-1/2" KIT, INSULATING (EACH METER)
10	1-1/2" STRAIGHT METER VALVE, METER FLG X FLR
11	1-1/2" COUPLING, STREAMLINE MIPT X FLR
12	2" X 1-1/2" BUSHING, BRASS MIPT X FIPT
13	2" TEE, BRASS, FIPT X FIPT X FIPT
14	METER BOX ✻
15	SADDLE, SERVICE SSCC OR DSCC
16	SADDLE, SERVICE CC
17	COUPLING, WELD FIPT
18	CLAMP, FULL CIRCLE w/ TAP FIPT
19	2" NIPPLE, BRASS CLOSE
20	2" COUPLING, COM X COM (PLASTIC TO PLASTIC) OR COM X FLR (PLASTIC TO COPPER)
21	2" INSERT ▲ (COMPRESSION FITTINGS ON PLASTIC SERVICES)

✻ REFER TO MATERIAL SPECIFICATIONS LIST FOR SIZING OF METER BOXES.

♦ ALL PLASTIC SERVICES MUST HAVE TRACER WIRE INSTALLED PER SPECIFICATIONS.

SERVICE PIPE SHALL BE BEDDED AND SHADED (4" MIN) IN SAND.

BY	REVISION	DATE	CK	AP	OPS

SAN JOSE WATER COMPANY

2" MANIFOLD SERVICE
w/ 2 - 1-1/2" METERS

BY P. JOCHIM
DATE 7/2/2013
CK 7/2/13
SCALE NONE

OPERATIONS 7/5/13
ENGINEERING 7/2/13
VICE-PRESIDENT OF ENGINEERING 7/19/13

REF. NOS.

DWG. NO. SER-2M

Effective 09/09/2013

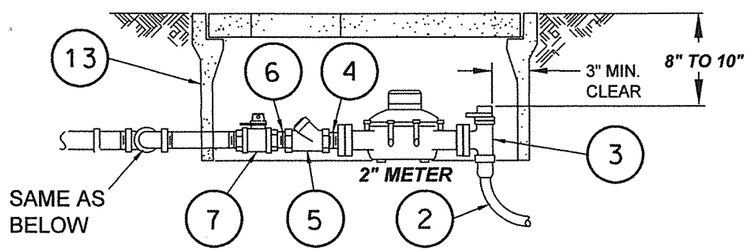

SECTION - 3" MANIFOLD SERVICE

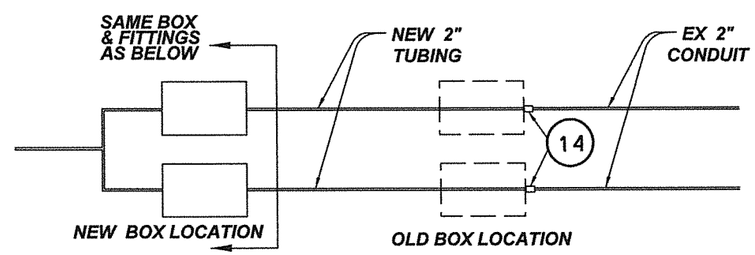

EXTENSION OF EXISTING 3" MANIFOLD SERVICE

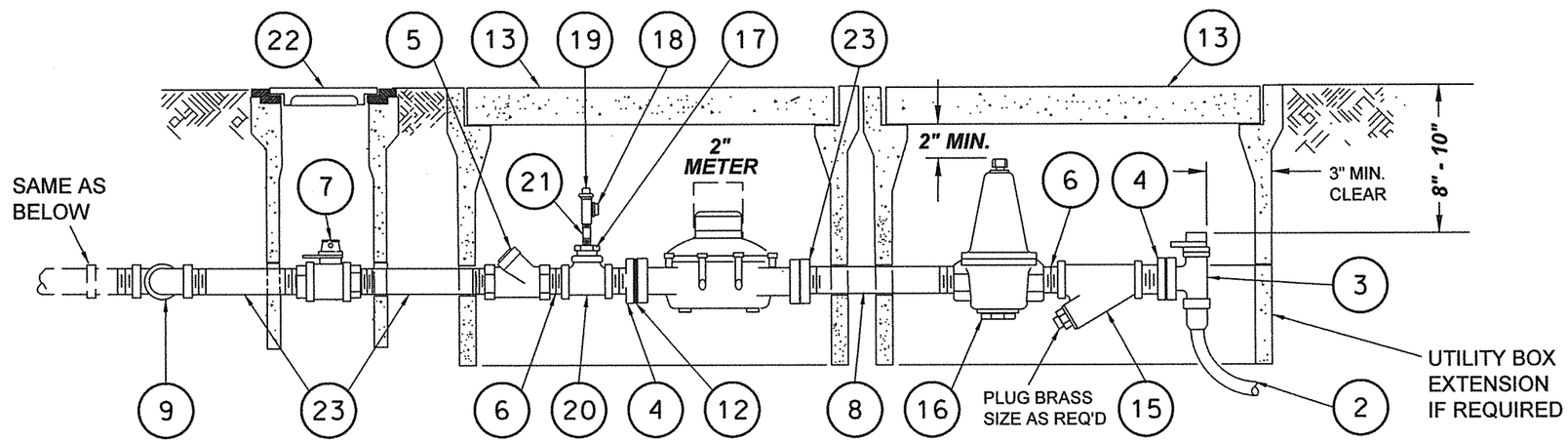

SECTION - 3" SERVICE w/ PRESSURE REGULATOR & CHECK VALVE

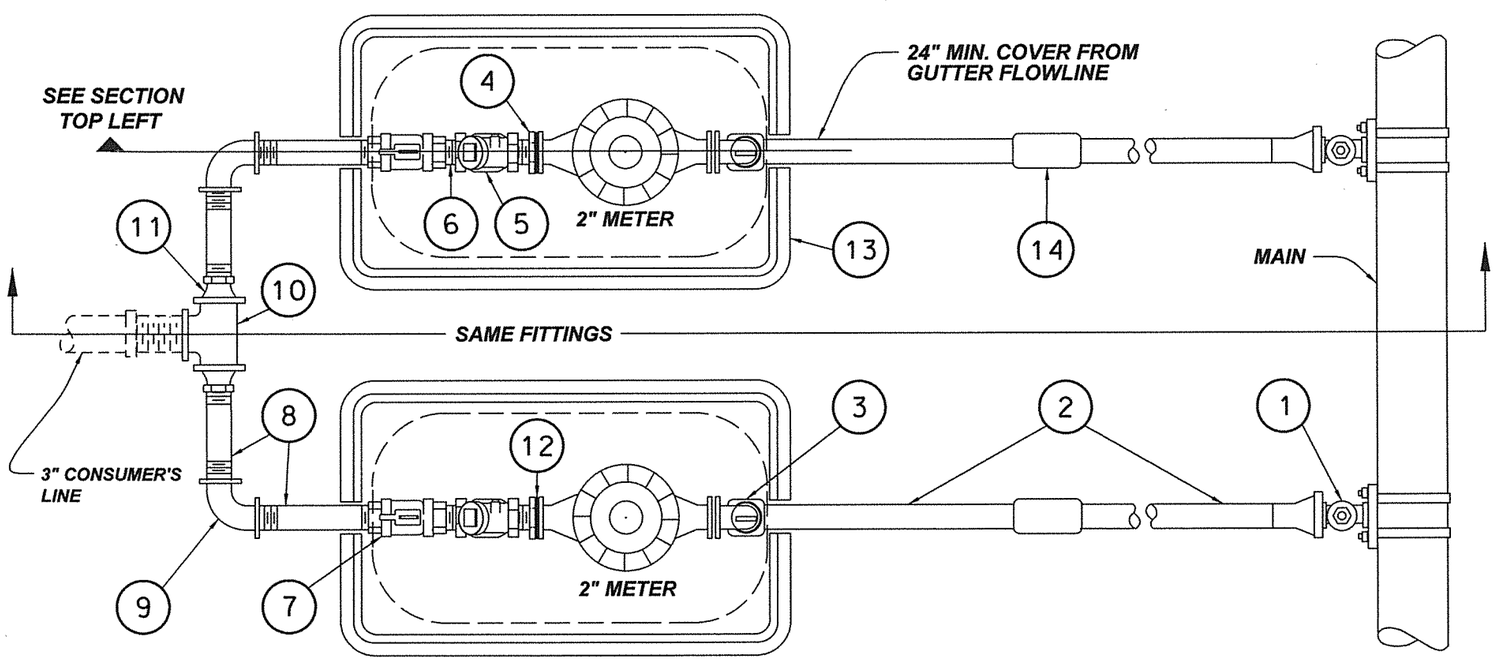

MATERIAL LIST

#	DESCRIPTION - COPPER SERVICE
1	2" CORP STOP (SEE SER-2c & 2p FOR CONNECTION) ✻
2	2" PIPE, COPPER TYPE K
3	2" ANGLE METER STOP, METER FLANGE X FLARE ✻
4	2" METER FLANGE MALE
5	2" CHECK VALVE WITH BUNA / PTFE SEAT, FIPT X FIPT
6	2" NIPPLE,STD BRASS
7	2" STRAIGHT METER VALVE, FIPT X FIPT
8	2" X 10" NIPPLE, STD. BRASS TBE
9	2" ELL 90°, STD, BRASS, FIPT X FIPT
10	3" TEE STD. BRASS
11	3" X 2" BUSHING STD. BRASS
12	2" KIT, INSULATING
13	METER BOX ✻✻
	DESCRIPTION - PLASTIC SERVICE
2	2" PIPE, PLASTIC PE CTS
3	2" ANGLE METER STOP, METER FLANGE X COM ♦
	FOR EXTENSIONS OF EXISTING 3" MANIFOLD SERVICES
14	2" COUPLING, STREAMLINE (CONNECTION VARIES)
	FOR SERVICES WITH PRESSURE REGULATORS & CHECK VALVES
15	2" STRAINER, FIPT X FIPT
16	2" REGULATOR, FIPT X FIPT
17	2" X 1/4" BUSHING, STD BRASS, MIPT X FIPT
18	1/4" VALVE BALL, FIPT
19	1/4" PLUG, STD BRASS
20	2" TEE, STD BRASS, FIPT X FIPT X FIPT
21	1/4" X 3" NIPPLE, STD BRASS
22	TRAFFIC VALVE BOX
23	2" X 8" NIPPLE,STD BRASS, TBE

✻ RATED FOR 300 P.S.I. WORKING PRESSURE

✻✻ SEE MATERIAL SPECIFICATION LIST FOR SIZING OF METER BOXES.

FOR MATERIAL FOR MAIN CONNECTIONS, SERVICE RECONNECTS & EXTENSIONS, REFER TO STD. DWGS. SER-2c & SER-2p.

SERVICE PIPE SHALL BE BEDDED AND SHADED (4" MIN) IN SAND

IF SERVICE IS FOR RECYCLED WATER (RW), SEE STD. DWG. SER-2c FOR ADDITIONAL REQUIREMENTS.

BY	DATE	CK	REVISION	BY
				OPS
				AP
				CK
				DATE

SAN JOSE WATER COMPANY

3" MANIFOLD SERVICE
w/ 2 - 2" METERS

BY DTFOLK'G	OPERATIONS 7/24/14	REF. NOS.
DATE 3/13/2014	ENGINEERING 6/23/14	DWG. NO. SER-3
CK	VICE PRESIDENT OF ENGINEERING 7/30/14	
SCALE NONE		

Effective 8/21/14

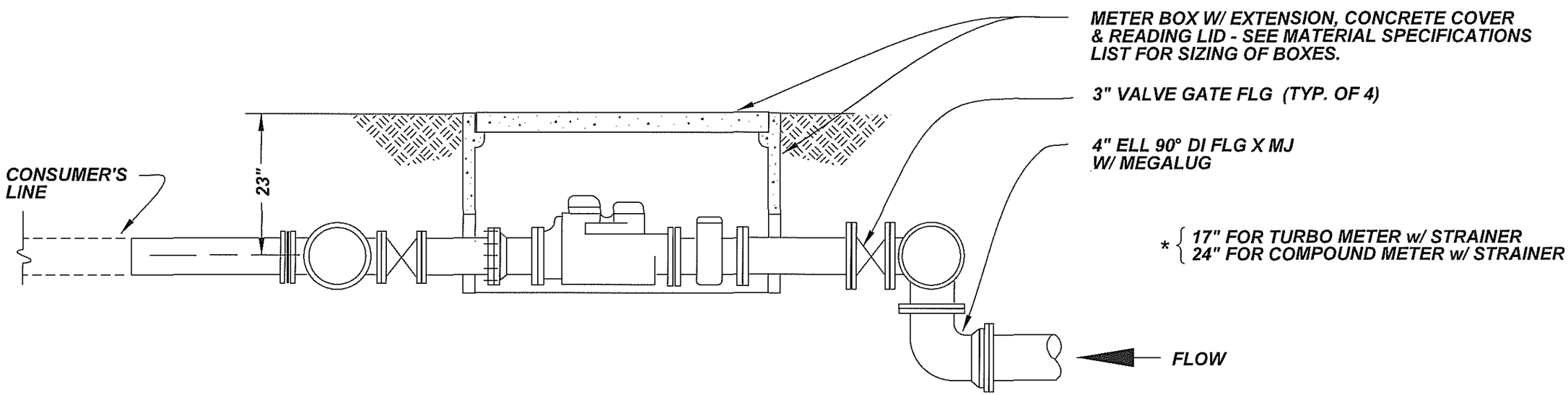

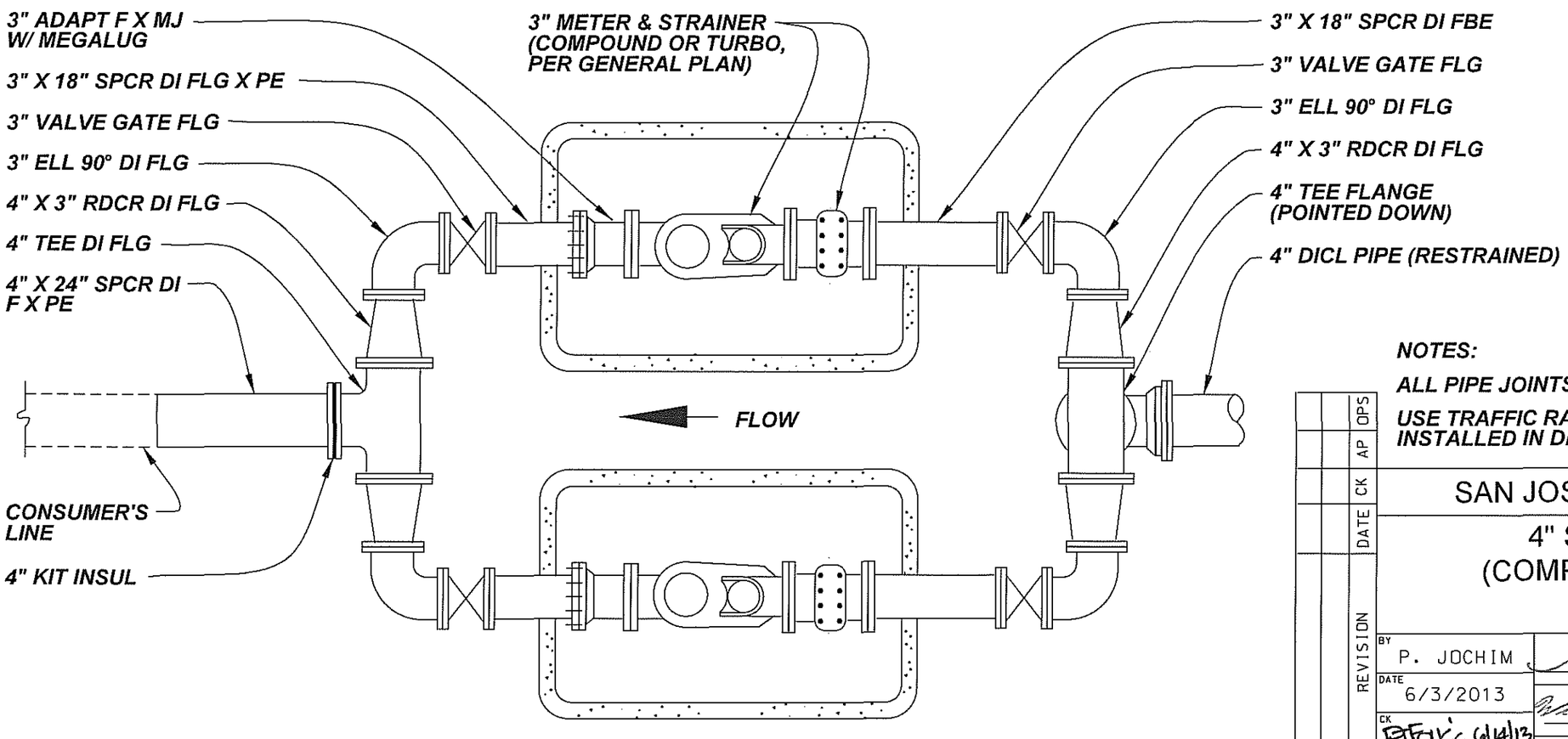

NOTES:

ALL PIPE JOINTS AND FITTINGS ARE RESTRAINED

USE TRAFFIC RATED BOXES FOR BOXES INSTALLED IN DRIVEWAYS OR SIDEWALKS

REVISION	BY	DATE	CK	AP	OPS

SAN JOSE WATER COMPANY

4" SERVICE w/ 2 - 3" (COMPOUND OR TURBO) METERS

BY P. JOCHIM

DATE 6/3/2013

CK 6/14/13

SCALE NONE

OPERATIONS 6/20/13

ENGINEERING 6/14/13

VICE PRESIDENT OF ENGINEERING 7/19/13

REF. NOS.

DWG. NO. SER-4

Effective 09/03/2013

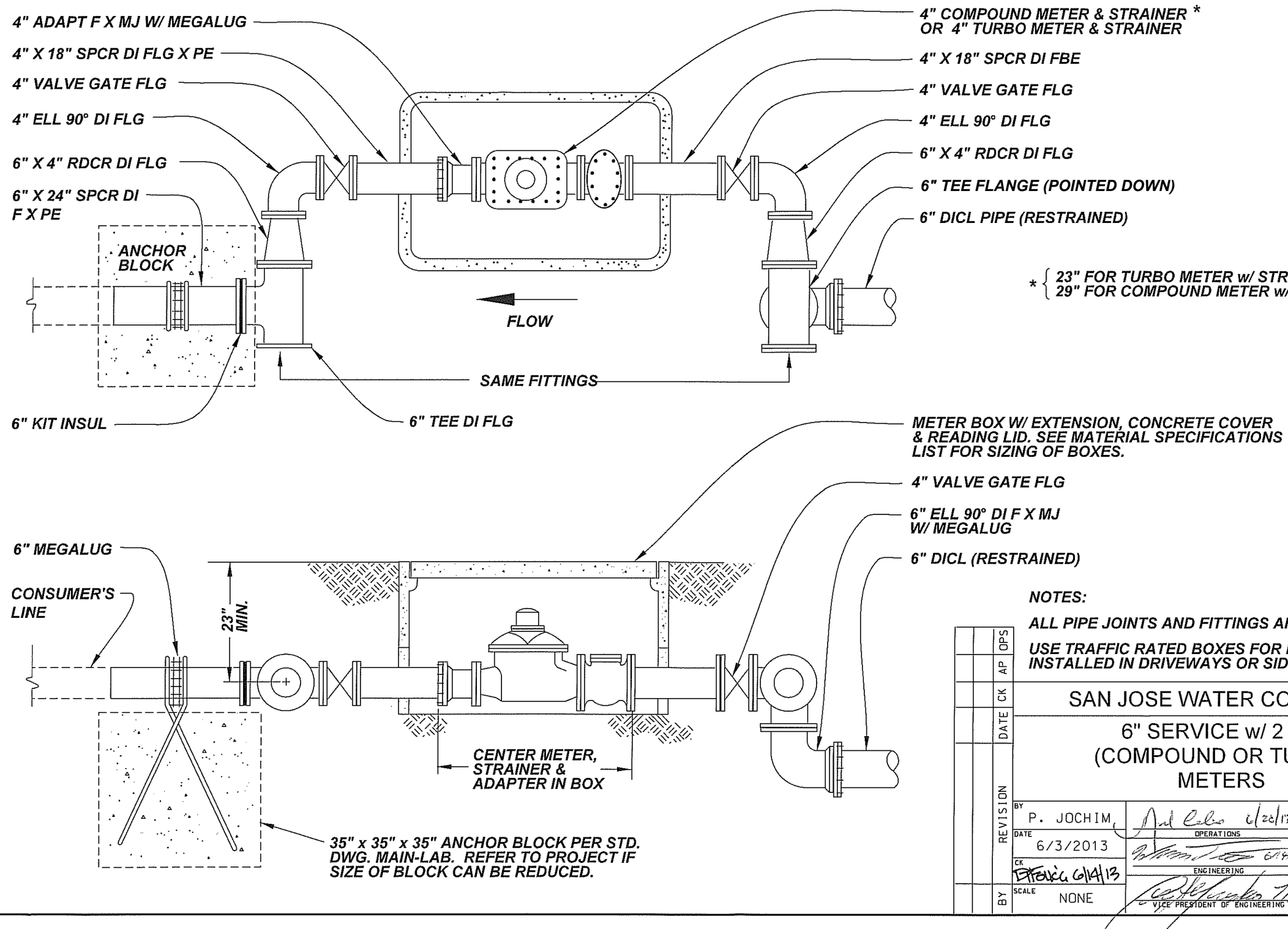

NOTES:

ALL PIPE JOINTS AND FITTINGS ARE RESTRAINED

USE TRAFFIC RATED BOXES FOR BOXES INSTALLED IN DRIVEWAYS OR SIDEWALKS

BY	REVISION	DATE	CK	AP	OPS

SAN JOSE WATER COMPANY

6" SERVICE w/ 2 - 4" (COMPOUND OR TURBO) METERS

BY P. JOCHIM	OPERATIONS 6/26/13	REF. NOS.
DATE 6/3/2013	ENGINEERING 6/14/13	DWG. NO. SER-6
CK 6/14/13	VICE PRESIDENT OF ENGINEERING 7/19/13	
SCALE NONE		

Effective 09/03/2013

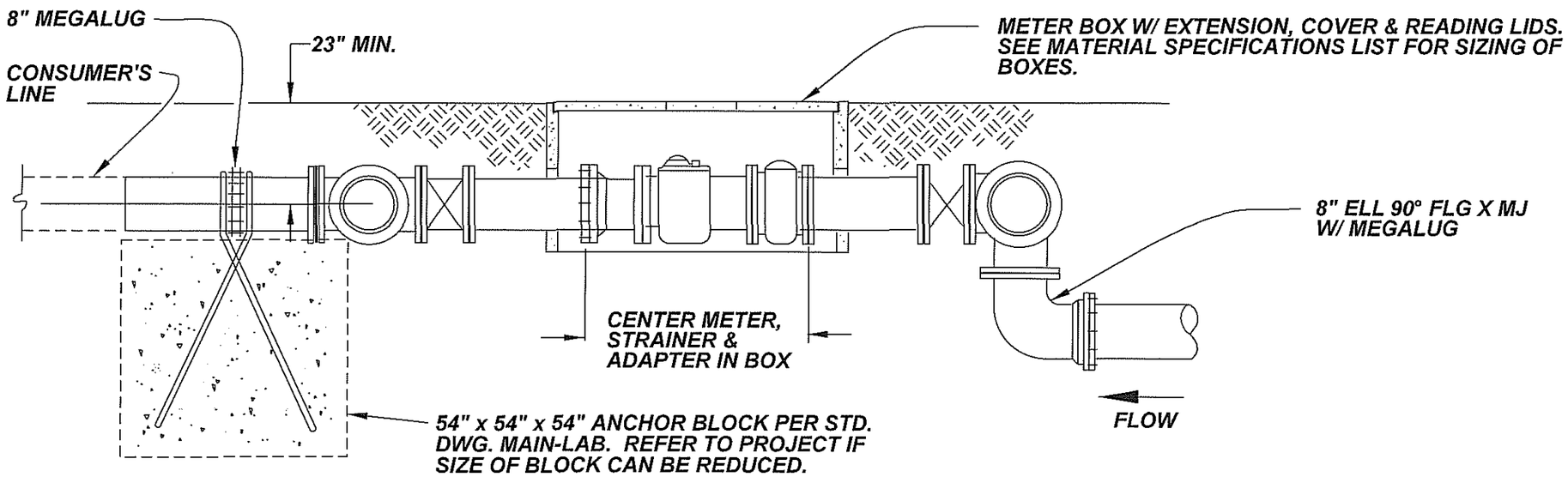

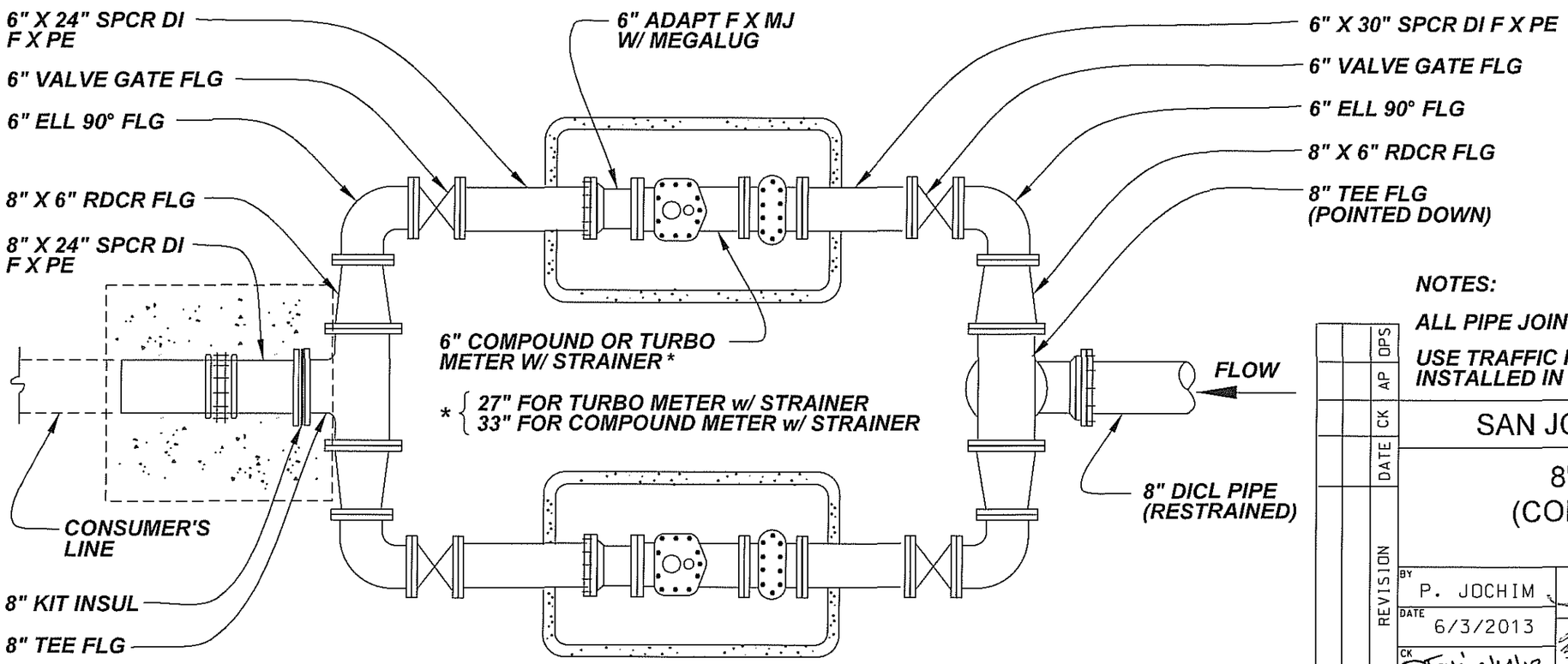

NOTES:

ALL PIPE JOINTS AND FITTINGS ARE RESTRAINED

USE TRAFFIC RATED BOXES FOR ALL BOXES INSTALLED IN DRIVEWAYS OR SIDEWALKS

SAN JOSE WATER COMPANY

8" SERVICE w/ 2 - 6" (COMPOUND OR TURBO) METERS

REVISION	BY	DATE	CK	BY
				OPS
				AP
				CK
				DATE

BY: P. JOCHIM
DATE: 6/3/2013
CK: 6/14/13
SCALE: NONE

OPERATIONS 6/20/13
ENGINEERING 6/14/13
VICE PRESIDENT OF ENGINEERING 7/19/13

REF. NOS.

DWG. NO. SER-8

Effective 09/03/2013

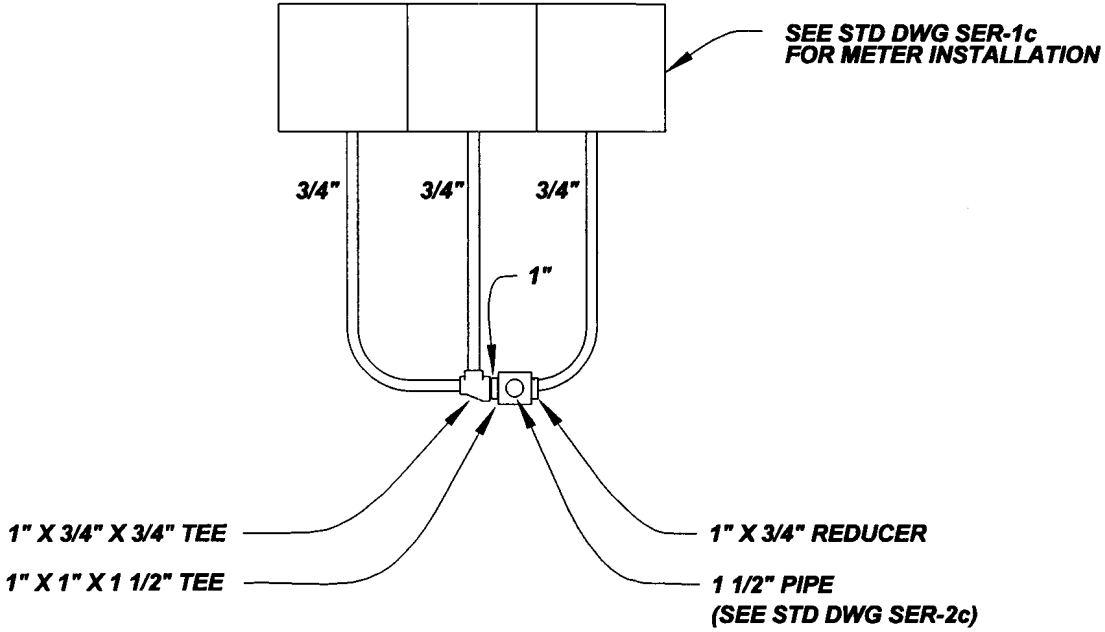

NOTE:

1. ALL PIPE IS COPPER TYPE "K".
2. ALL FITTINGS ARE STREAMLINE.

3-3/4" METER BANK
(1 1/2" Service w/3-3/4" Offsets)

SAN JOSE WATER COMPANY			
MANIFOLD SERVICE 3-3/4" METERS			
BY P. JOCHIM	OPERATIONS	REF. NOS.	D-5-609(3)
DATE 15NOV'04	ENGINEERING	DWG. NO.	SER-M3
CK ELM			
SCALE NONE	CHIEF ENGINEER		

REVISION | DATE | CK | AP | OPS | BY

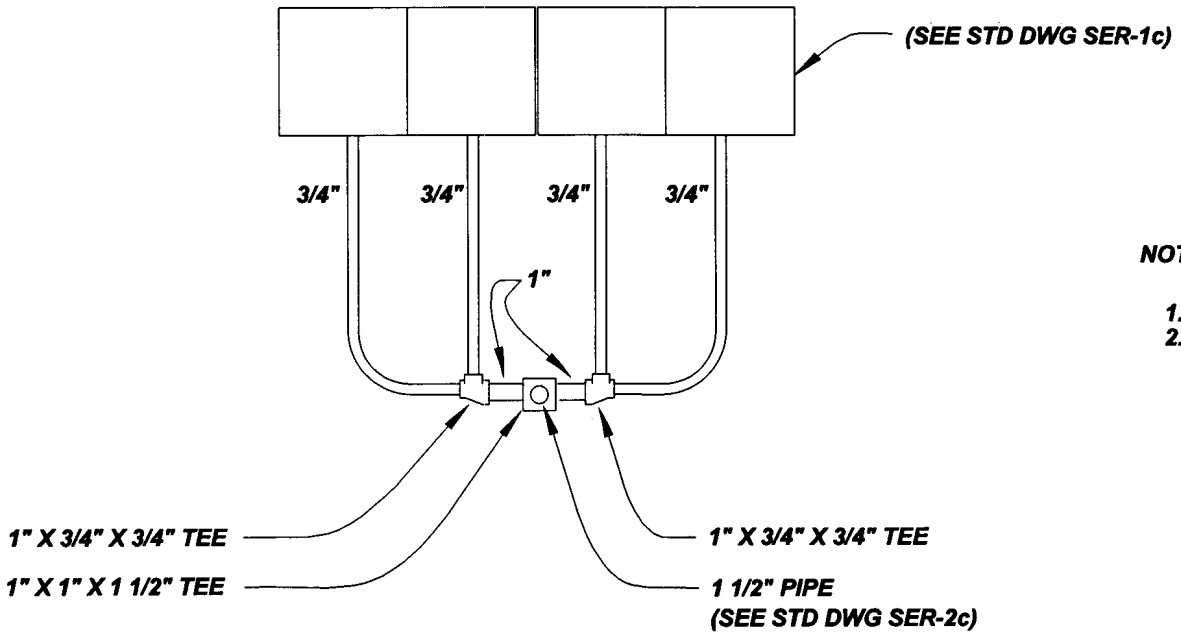

NOTE:

1. ALL PIPE IS COPPER TYPE "K".
2. ALL FITTINGS ARE STREAMLINE.

4-3/4" METER BANK
(1 1/2" Service w/4-3/4" offsets)

REVISION	BY	DATE	CK	OPS	AP

SAN JOSE WATER COMPANY

MANIFOLD SERVICE
4-3/4" METERS

BY P. JOCHIM	OPERATIONS	REF. NOS. D-5-609(4)
DATE 15NOV'04	ENGINEERING	DWG. NO. SER-M4
CK ELM		
SCALE NONE	CHIEF ENGINEER	

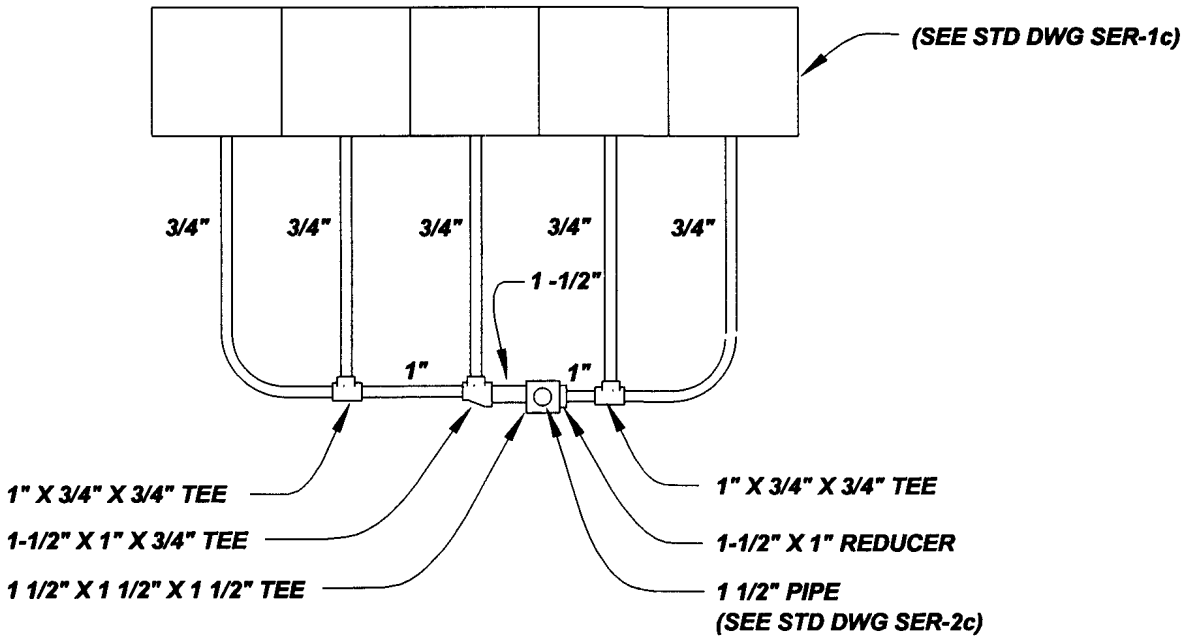

NOTE:

1. ALL PIPE IS COPPER TYPE "K".
2. ALL FITTINGS ARE STREAMLINE.

5-3/4" METER BANK
(1 1/2" Service w/5-3/4" offsets)

REVISION	BY	DATE	CK	AP	OPS

SAN JOSE WATER COMPANY

MANIFOLD SERVICE
5-3/4" METERS

BY P. JOCHIM
DATE 15NOV'04
CK ELM
SCALE NONE

OPERATIONS
ENGINEERING
CHIEF ENGINEER

REF. NOS. D-5-609(5)
DWG. NO. SER-M5

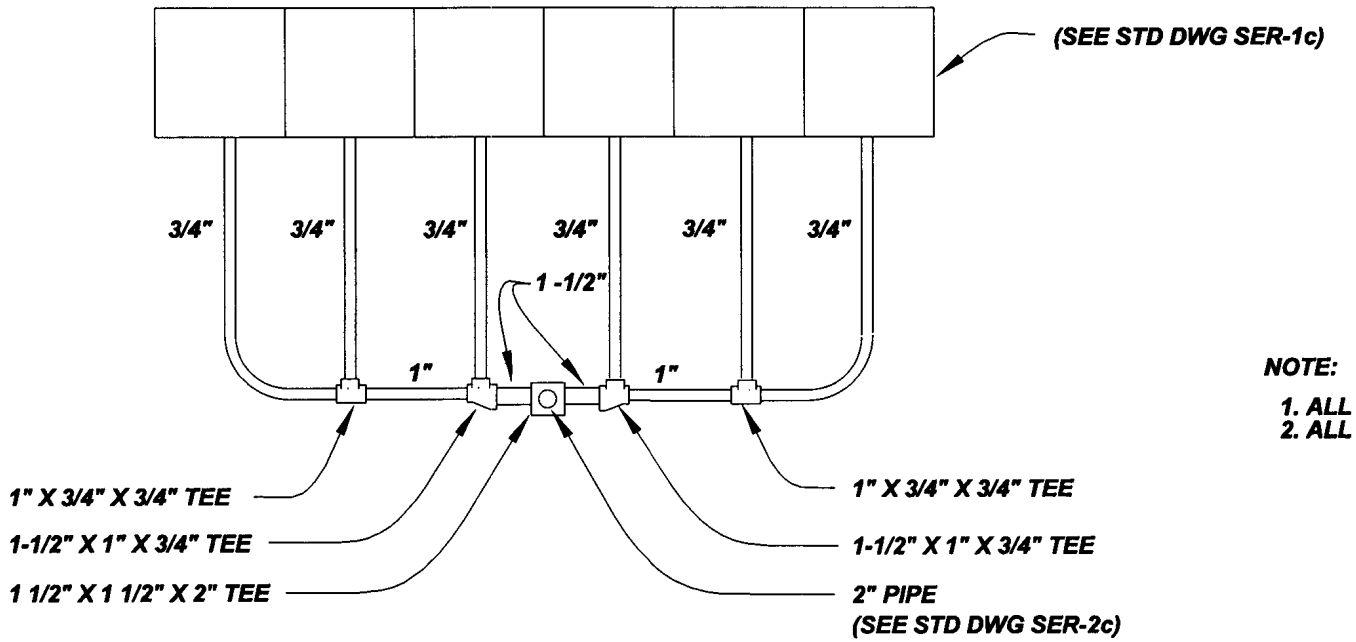

NOTE:

1. ALL PIPE IS COPPER TYPE "K".
2. ALL FITTINGS ARE STREAMLINE.

6-3/4" METER BANK
(2" Service w/6-3/4" offsets)

REVISION	BY	DATE	CK	AP	OPS

SAN JOSE WATER COMPANY

MANIFOLD SERVICE
6-3/4" METERS

BY P. JOCHIM	OPERATIONS	REF. NOS. D-5-609(6)
DATE 15 NOV'04	ENGINEERING	DWG. NO. SER-M6
CK EUM	CHIEF ENGINEER	
SCALE NONE		

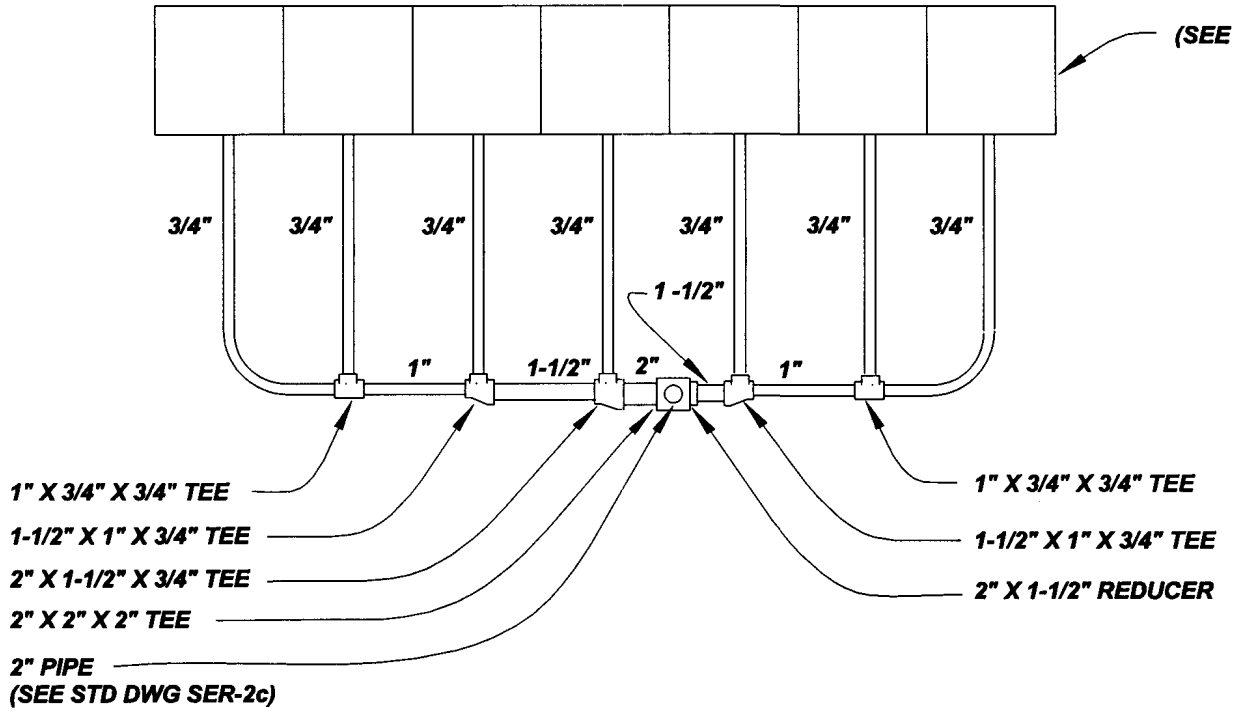

NOTE:

1. ALL PIPE IS COPPER TYPE "K".
2. ALL FITTINGS ARE STREAMLINE.

7-3/4" METER BANK
(2" Service w/7-3/4" offsets)

BY	DATE	CK	AP	OPS

REVISION

SAN JOSE WATER COMPANY

MANIFOLD SERVICE
7-3/4" METERS

BY: P. JOCHIM
DATE: 15NOV'01
CK: ELM
SCALE: NONE

OPERATIONS
ENGINEERING
CHIEF ENGINEER

REF. NOS.: D-5-609(7)
DWG. NO.: SER-M7

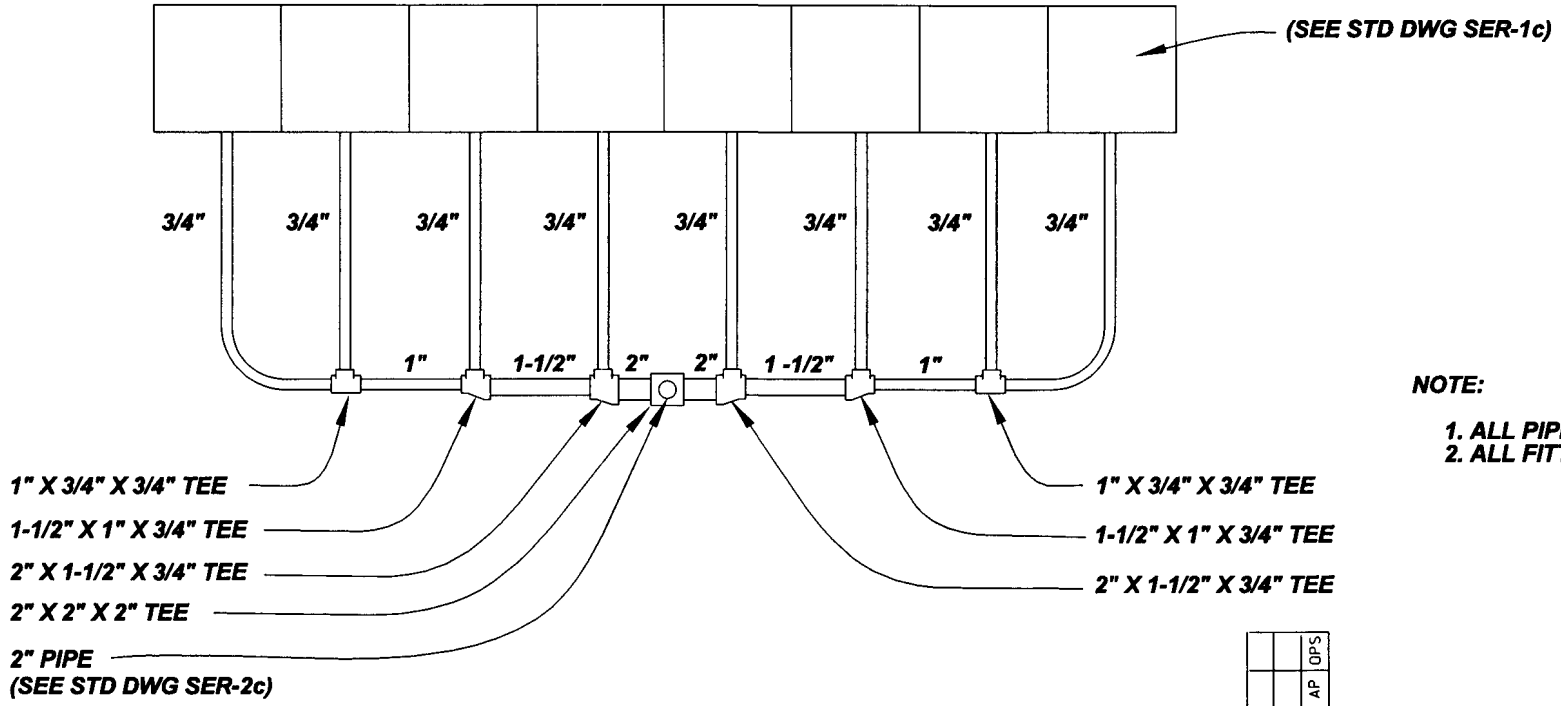

NOTE:

1. ALL PIPE IS COPPER TYPE "K".
2. ALL FITTINGS ARE STREAMLINE.

8-3/4" METER BANK
(2" Service w/8-3/4" offsets)

REVISION	BY	P. JOCHIM	OPERATIONS	SAN JOSE WATER COMPANY	REF. NOS.	D-5-609(8)
	DATE	15NOV'04		MANIFOLD SERVICE 8-3/4" METERS	DWG. NO.	SER-M8
	CK	ELM	ENGINEERING			
	SCALE	NONE	CHIEF ENGINEER			

OPS | AP | CK | DATE | BY

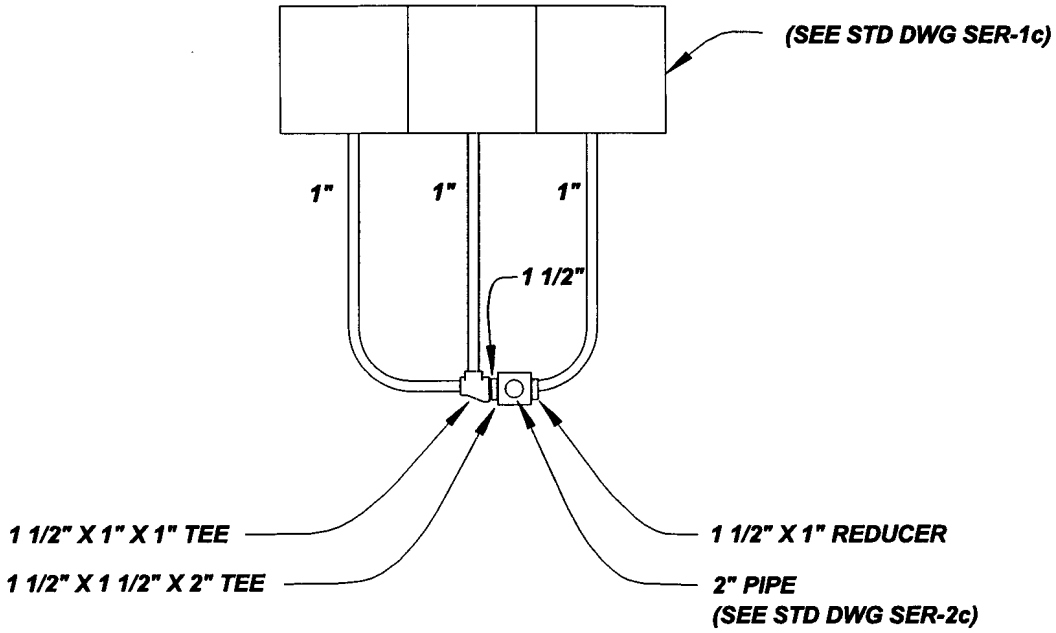

NOTE:

1. ALL PIPE IS COPPER TYPE "K".
2. ALL FITTINGS ARE STREAMLINE.

3-1" METER BANK
(2" Service w/3-1" Offsets)

REVISION	BY	DATE	CK	OPS	AP

SAN JOSE WATER COMPANY

MANIFOLD SERVICE
3-1" METERS

BY P. JOCHIM	OPERATIONS	REF. NOS. D-5-609(3)
DATE 15NOV'04	ENGINEERING	DWG. NO. SER-M3-1
CK EUM	CHIEF ENGINEER	
SCALE NONE		

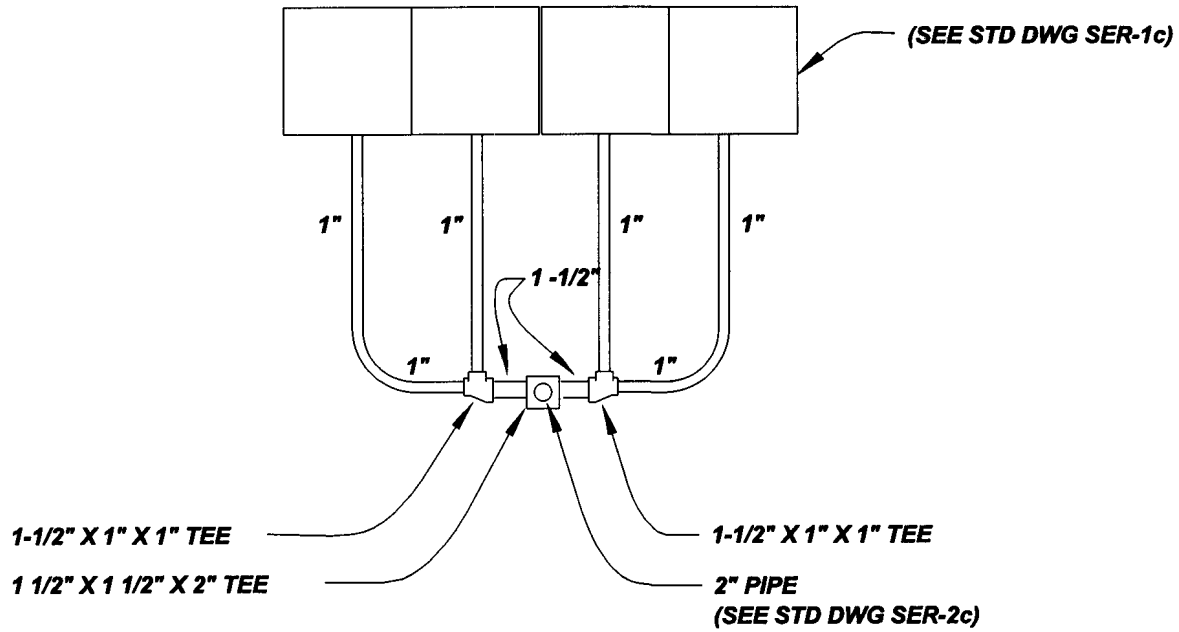

NOTE:

1. ALL PIPE IS COPPER TYPE "K".
2. ALL FITTINGS ARE STREAMLINE.

4-1" METER BANK
(2" Service w/4-1" offsets)

BY	DATE	CK	AP	OPS

REVISION

SAN JOSE WATER COMPANY

MANIFOLD SERVICE
4-1" METERS

BY: P. JOCHIM
DATE: 15Nov'04
CK: ELM
SCALE: NONE

OPERATIONS
ENGINEERING
CHIEF ENGINEER

REF. NOS.: D-5-609(4)
DWG. NO.: SER-M4-1