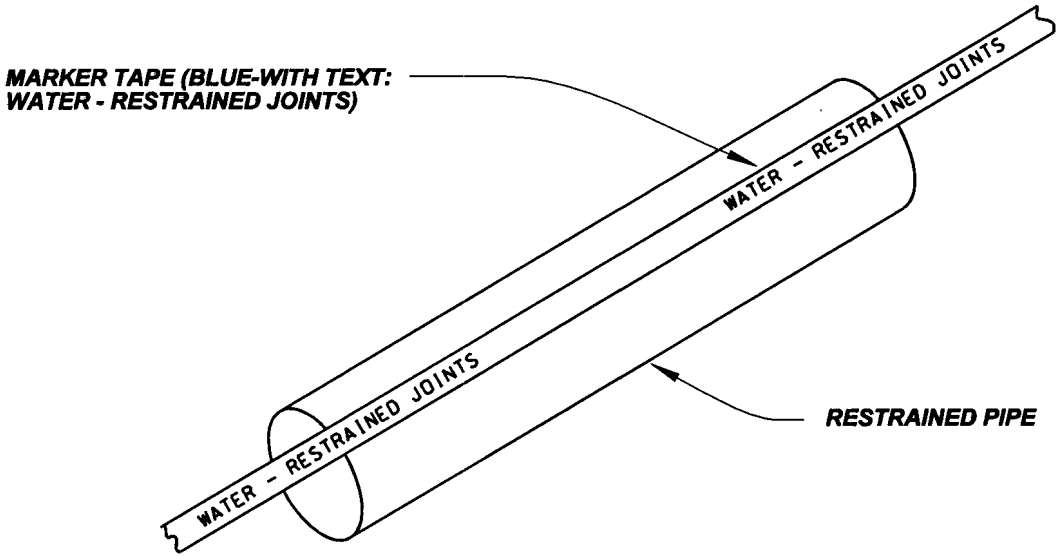

NOTE: MARKER TAPE ATTACHED TO THE TOP OF PIPE WITH DUCT TAPE.

RESTRAINED PIPE DETAIL

NO SCALE

BY	DATE	CK	AP	OPS

REVISION

SAN JOSE WATER COMPANY

RESTRAINED PIPE MARKING

BY P. JOCHIM

DATE 15NOV'04

CK ELM

SCALE NONE

OPERATIONS

ENGINEERING

CHIEF ENGINEER

REF. NOS.

DWG. NO. MAIN-RPM