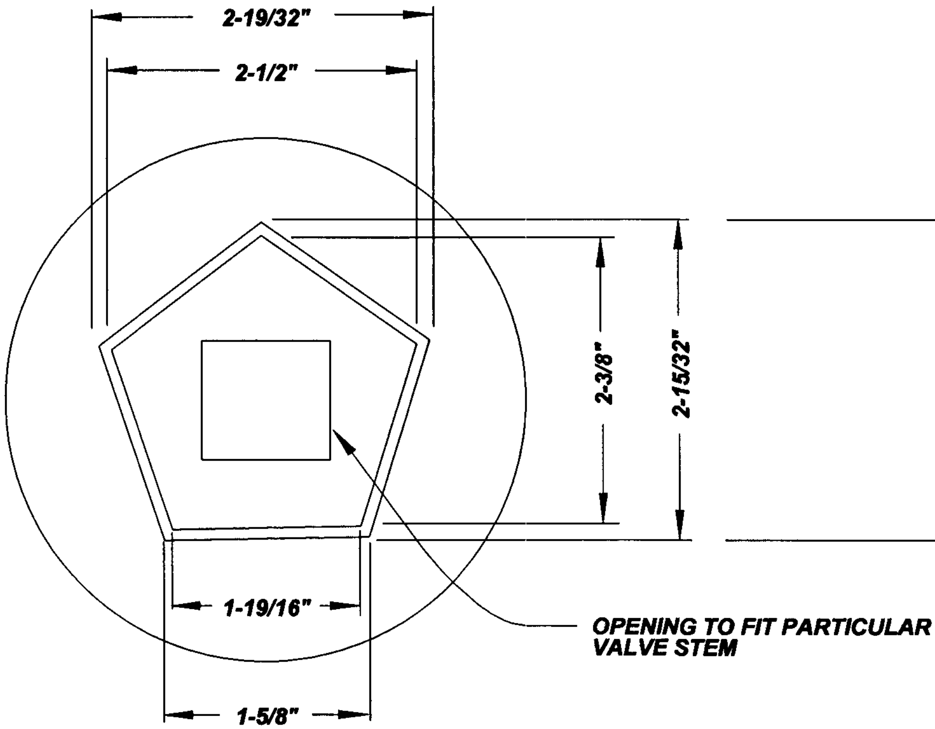

TOP VIEW

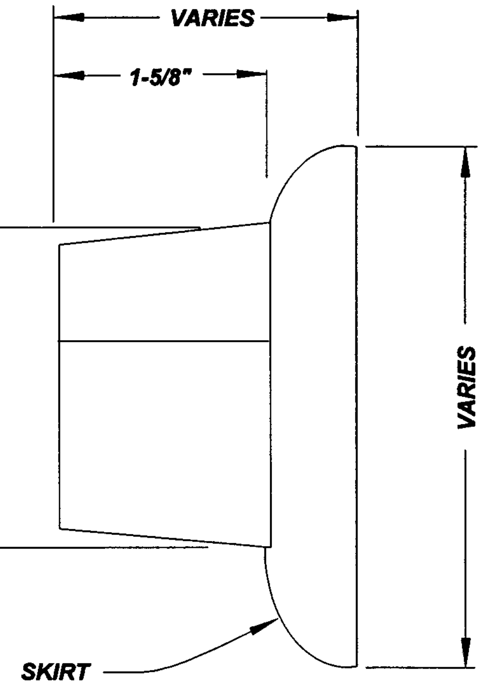

SIDE VIEW

NOTES:

DEPTH & DIAMETER OF SKIRT BELOW BASE OF NUT IS NOT CRITICAL

REMOVE SQUARE GATE VALVE WRENCH NUT FROM VALVE STEM AND REPLACE W/PENTAGON NUT.

MATERIAL: CAST IRON OR DUCTILE IRON

OPS	AP	CK	DATE	REVISION	BY

SAN JOSE WATER COMPANY

PENTAGON NUT
FOR LEFT-HAND OPEN GATE VALVE

BY P. JOCHIM	OPERATIONS	REF. NOS. A-12-154
DATE 15NOV'04	ENGINEERING	DWG. NO. MAIN-PN
CK ELM		
SCALE NONE	CHIEF ENGINEER	